MSAS™
Master Surface Annulus Safety Valve

PETROLEUM TECHNOLOGY COMPANY

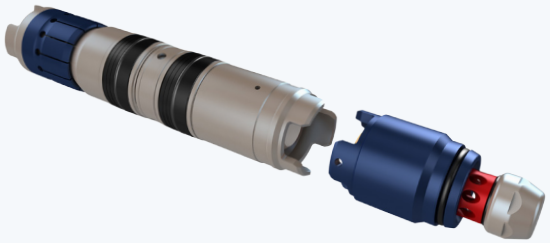

Hydraulically activated barrier valve installed in the wellhead VR profile

Assures well integrity even upon impact or collision.

Fail safe close barrier valve provides an independent primary barrier for gas lifted, gas vented or for wells with sustained annulus pressure.

Challenge

Gas lifted, gas vented or wells with sustained annulus pressure pose a considerable risk to personnel and facilities. In these applications annulus gate valves and ring gaskets are the primary well barrier. Gate valves provide only a single barrier, which can be breached upon impact or collision.

Regulatory and/or company requirements may demand mitigation for the associated risks.

Solution

The MSAS, provides an additional independent barrier in the wellhead VR profile. The MSAS is hydraulically operated and connected to ESD. Should an impact or collision take place, the API 6FD/FB fire tested barrier valve locked in the VR profile will close and remain within the wellhead, thus securing the pressurized annular volume.

The MSAS system can be integrated in an API gate valve (MSAS-G) and has a smaller footprint as the valve actuator is installed within the gate valve bore (see illustration on next page).

Features

- Based on API 6A
- Fire tested to API 6FD & 6FB
- Bi-directional flow
- For gas injection and annulus venting applications
- Fail safe close barrier valve
- Independent barrier
- NORSOK D-010 compliant

Benefits

- Enhances well integrity
- Can be used to substitute the annular safety valve or downhole gas vent valve, or similar down hole barrier
- Eliminates the need for an ESD gate valve
- Easy installation and service, even in live wells
- No piping modification required (MSAS-G)

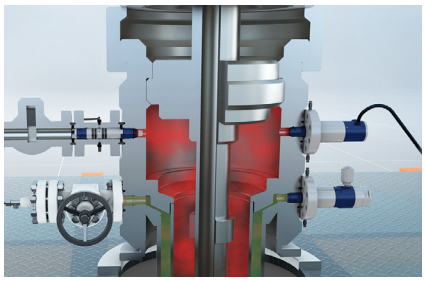

PTC's Dual Barrier MSAS and VR Sensors installed in wellhead.

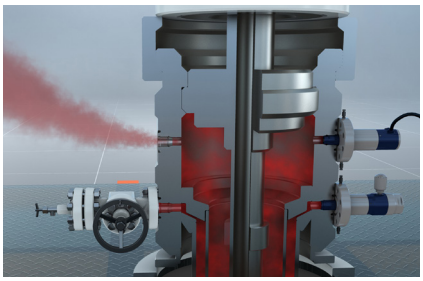

Wellhead gate valve knocked off, no MSAS installed. Entire annulus volume can be vented to atmosphere.

MSAS™
Master Surface Annulus Safety Valve

Hydraulically activated barrier valve installed in the wellhead VR profile

Specifications	
Size Range, in.	2-1/6 to 3-1/8
Valve/ Actuator Material	Alloy K500
Seals Material	FKM/PEEK/PTFE
Pressure Rating, psi [Mpa]	10 000 [69]
Temperature Class, L-U °F [°C]	-51 to 250 [-46 to 121]
Flow Area Range, in² [cm²]	0.15 - 1 [0.97 to 6.45]
Min. Hydr. Pressure, psi [Mpa]	2 500 over inj. pressure [10.3]
Flow Rate Range (fluid), bbls/min [l/min]	1 - 5 [159 to 795]
Applicable Standard	API 6A, PSL3G, PR2

MSAS-G™

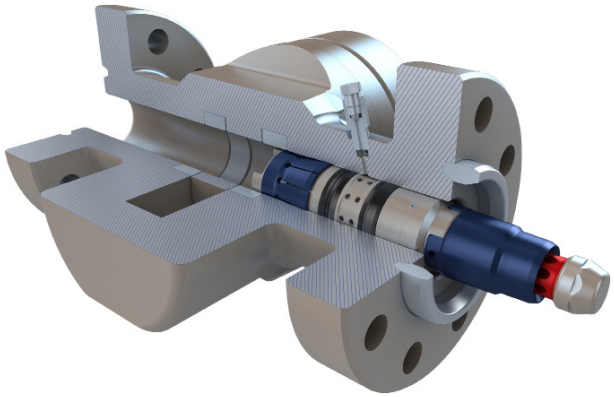

MSAS-G System with the hydraulic actuator installed inside the API gate valve bore. MSAS-G is designed for applications where piping modifications are not desired or possible to perform. Cost effective and safe installations are provided by simply replacing the excising gate valve with PTC's gate valve and MSAS-G system.

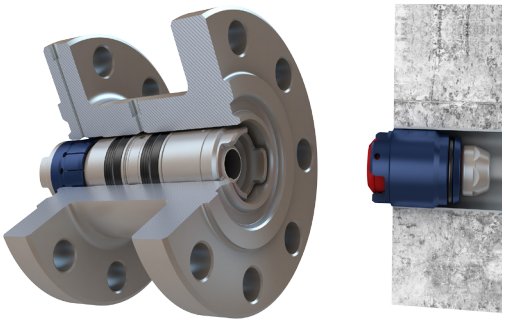

Assures well integrity even upon impact or collision.